Amadeo Water District

Supply of Labor and Materials for the Expansion of Distribution Lines of Amadeo Water District in Barangay Salaban and Barangay Halang

June 2025

TABLE OF CONTENTS

Glossary of Terms, Abbreviations, and Acronyms 4

Section I. Invitation to Bid 7

Section II. Instructions to Bidders 10

1. Scope of Bid 11
2. Funding Information 11
3. Bidding Requirements 11
4. Corrupt, Fraudulent, Collusive, Coercive, and Obstructive Practices 11
5. Eligible Bidders 12
6. Origin of Associated Goods 12
7. Subcontracts 12
8. Pre-Bid Conference 12
9. Clarification and Amendment of Bidding Documents 13
10. Documents Comprising the Bid: Eligibility and Technical Components 13
11. Documents Comprising the Bid: Financial Component 13
12. Alternative Bids 14
13. Bid Prices 14
14. Bid and Payment Currencies 14
15. Bid Security 14
16. Sealing and Marking of Bids 14
17. Deadline for Submission of Bids 15
18. Opening and Preliminary Examination of Bids 15
19. Detailed Evaluation and Comparison of Bids 15
20. Post Qualification 15
21. Signing of the Contract 16

Section III. Bid Data Sheet 17

Section IV. General Conditions of Contract 20

1. Scope of Contract 21
2. Sectional Completion of Works 21
3. Possession of Site 21
4. The Contractor's Obligations 21
5. Performance Security 22
6. Site Investigation Reports 22

7. Warranty....22
8. Liability of the Contractor....22
9. Termination for Other Causes....22
10. Dayworks....22
11. Program of Work....23
12. Instructions, Inspections and Audits....23
13. Advance Payment....23
14. Progress Payments....23
15. Operating and Maintenance Manuals....23

Section V. Special Conditions of Contract....25

Section VI. Specifications....27

Section VII. Drawings....30

Section VIII. Bill of Quantities....34

Section IX. Checklist of Technical and Financial Documents....39

Glossary of Terms, Abbreviations, and Acronyms

ABC – Approved Budget for the Contract.

ARCC – Allowable Range of Contract Cost.

BAC – Bids and Awards Committee.

Bid – A signed offer or proposal to undertake a contract submitted by a bidder in response to and in consonance with the requirements of the bidding documents. Also referred to as *Proposal* and *Tender.* (2016 revised IRR, Section 5[c])

Bidder – Refers to a contractor, manufacturer, supplier, distributor and/or consultant who submits a bid in response to the requirements of the Bidding Documents. (2016 revised IRR, Section 5[d])

Bidding Documents – The documents issued by the Procuring Entity as the bases for bids, furnishing all information necessary for a prospective bidder to prepare a bid for the Goods, Infrastructure Projects, and/or Consulting Services required by the Procuring Entity. (2016 revised IRR, Section 5[e])

BIR – Bureau of Internal Revenue.

BSP – Bangko Sentral ng Pilipinas.

CDA – Cooperative Development Authority.

Consulting Services – Refer to services for Infrastructure Projects and other types of projects or activities of the GOP requiring adequate external technical and professional expertise that are beyond the capability and/or capacity of the GOP to undertake such as, but not limited to: (i) advisory and review services; (ii) pre-investment or feasibility studies; (iii) design; (iv) construction supervision; (v) management and related services; and (vi) other technical services or special studies. (2016 revised IRR, Section 5[i])

Contract – Refers to the agreement entered into between the Procuring Entity and the Supplier or Manufacturer or Distributor or Service Provider for procurement of Goods and Services; Contractor for Procurement of Infrastructure Projects; or Consultant or Consulting Firm for Procurement of Consulting Services; as the case may be, as recorded in the Contract Form signed by the parties, including all attachments and appendices thereto and all documents incorporated by reference therein.

Contractor – is a natural or juridical entity whose proposal was accepted by the Procuring Entity and to whom the Contract to execute the Work was awarded. Contractor as used in these Bidding Documents may likewise refer to a supplier, distributor, manufacturer, or consultant.

CPI – Consumer Price Index.

DOLE – Department of Labor and Employment.

DTI – Department of Trade and Industry.

Foreign-funded Procurement or Foreign-Assisted Project – Refers to procurement whose funding source is from a foreign government, foreign or international financing institution as specified in the Treaty or International or Executive Agreement. (2016 revised IRR, Section 5[b]).

GFI – Government Financial Institution.

GOCC – Government-owned and/or –controlled corporation.

Goods – Refer to all items, supplies, materials and general support services, except Consulting Services and Infrastructure Projects, which may be needed in the transaction of public businesses or in the pursuit of any government undertaking, project or activity, whether in the nature of equipment, furniture, stationery, materials for construction, or personal property of any kind, including non-personal or contractual services such as the repair and maintenance of equipment and furniture, as well as trucking, hauling, janitorial, security, and related or analogous services, as well as procurement of materials and supplies provided by the Procuring Entity for such services. The term "related" or "analogous services" shall include, but is not limited to, lease or purchase of office space, media advertisements, health maintenance services, and other services essential to the operation of the Procuring Entity. (2016 revised IRR, Section 5[r])

GOP – Government of the Philippines.

Infrastructure Projects – Include the construction, improvement, rehabilitation, demolition, repair, restoration or maintenance of roads and bridges, railways, airports, seaports, communication facilities, civil works components of information technology projects, irrigation, flood control and drainage, water supply, sanitation, sewerage and solid waste management systems, shore protection, energy/power and electrification facilities, national buildings, school buildings, hospital buildings, and other related construction projects of the government. Also referred to as *civil works or works*. (2016 revised IRR, Section 5[u])

LGUs – Local Government Units.

NFCC – Net Financial Contracting Capacity.

NGA – National Government Agency.

PCAB – Philippine Contractors Accreditation Board.

PhilGEPS - Philippine Government Electronic Procurement System.

Procurement Project – refers to a specific or identified procurement covering goods, infrastructure project or consulting services. A Procurement Project shall be described, detailed, and scheduled in the Project Procurement Management Plan prepared by the agency which shall be consolidated in the procuring entity's Annual Procurement Plan. (GPPB Circular No. 06-2019 dated 17 July 2019)

PSA – Philippine Statistics Authority.

SEC – Securities and Exchange Commission.

SLCC – Single Largest Completed Contract.

UN – United Nations.

Section I.

Invitation to Bid

INVITATION TO BID FOR SUPPLY OF LABOR AND MATERIALS FOR THE EXPANSION OF DISTRIBUTION LINES OF AMADEO WATER DISTRICT IN BARANGAY SALABAN AND BARANGAY HALANG

1. The **AMADEO WATER DISTRICT**, through the **Landbank Back-to-back Loan** intends to apply the sum of **Two Million Eighty Eight Thousand Two Hundred Eighty Two Pesos and Forty Centavos (PhP 2,088,282.40)** being the Approved Budget for the Contract (ABC) to payments under the contract for the **Supply of Labor and Materials for the Expansion of Distribution Lines of Amadeo Water District in Barangay Salaban and Barangay Halang – AWD PB 2025-005**. Bids received in excess of the ABC shall be automatically rejected at bid opening.

2. The **AMADEO WATER DISTRICT** now invites bids for the above Procurement Project. Delivery of the services is required within **sixty (60) calendar days**. Bidders should have completed a contract similar to the Project. The description of an eligible bidder is contained in the Bidding Documents, particularly, in Section II (Instructions to Bidders).

3. Bidding will be conducted through open competitive bidding procedures using non-discretionary "*pass/fail*" criterion as specified in the 2016 revised Implementing Rules and Regulations (IRR) of Republic Act (RA) No. 9184.

4. Interested bidders may obtain further information from **AMADEO WATER DISTRICT** and inspect the Bidding Documents at the address given below from **Monday – Friday, 8:00am to 5:00pm**.

5. A complete set of Bidding Documents may be acquired by interested bidders on **16 June 2025** from given address and website/s below and upon payment of the applicable fee for the Bidding Documents, pursuant to the latest Guidelines issued by the GPPB, in the amount of **Five Thousand Pesos (PhP 5,000.00).** The Procuring Entity shall allow the bidder to present its proof of payment for the fees to be presented in person or through electronic means.

6. The **AMADEO WATER DISTRICT** will hold a Pre-Bid Conference[1] on **24 June 2025, 9:00 am** at **Amadeo Water District Office at 012 J. dela Peña St., Brgy. 9, Amadeo, Cavite,** which shall be open to prospective bidders.

[1] May be deleted in case the ABC is less than One Million Pesos (PhP1,000,000) where the Procuring Entity may not hold a pre-bid conference.

7. Bids must be duly received by the BAC Secretariat through manual submission at the office address as indicated below, on or before **7 July 2025, at 9:15 am**. Late bids shall not be accepted.

8. All bids must be accompanied by a bid security in any of the acceptable forms and in the amount stated in **ITB** Clause 16.

9. Bid opening shall be on **7 July 2025, at 9:30 am** at the given address below. Bids will be opened in the presence of the bidders' representatives who choose to attend the activity.

10. The **AMADEO WATER DISTRICT** reserves the right to reject any and all bids, declare a failure of bidding, or not award the contract at any time prior to contract award in accordance with Sections 35.6 and 41 of the 2016 revised Implementing Rules and Regulations (IRR) of RA No. 9184, without thereby incurring any liability to the affected bidder or bidders.

11. For further information, please refer to:

    MONETH G. BAYBAY
    Head, BAC Secretariat
    AMADEO WATER DISTRICT
    012 J. dela Pena St., Brgy. 9,
    Amadeo, Cavite
    Tel. no. (046) 483-1508
    E-mail address: amadeowd@yahoo.com
    Website address: amadeowater.com

12. You may visit the following websites:

    For downloading of Bidding Documents:
    https://amadeowater.com/philgeps-postings/

    » Invitation to Bid/ Bidding Documents
    » AWD PB 2025-005

16 June 2025

ENGR. RHODERICK L. MARANAN
BAC Chairperson

Section II.

Instructions to Bidders

1. Scope of Bid

The Procuring Entity, **AMADEO WATER DISTRICT** invites Bids for the **Supply of Labor and Materials for the Expansion of Distribution Lines of Amadeo Water District in Barangay Salaban and Barangay Halang**, with Project Identification Number **AWD PB 2025-005**.

The Procurement Project (referred to herein as "Project") is for the construction of Works (Pipe Laying and Installation of Fittings and Appurtenances), as described in Section VI (Specifications).

2. Funding Information

2.1. The GOP through the source of funding as indicated below for CY 2025 in the amount of **Two Million Eighty Eight Thousand Two Hundred Eighty Two Pesos and Forty Centavos (PhP 2,088,282.40).**

2.2. The source of funding is:

Landbank Back-to-back Loan

3. Bidding Requirements

The Bidding for the Project shall be governed by all the provisions of RA No. 9184 and its 2016 revised IRR, including its Generic Procurement Manual and associated policies, rules and regulations as the primary source thereof, while the herein clauses shall serve as the secondary source thereof.

Any amendments made to the IRR and other GPPB issuances shall be applicable only to the ongoing posting, advertisement, or invitation to bid by the BAC through the issuance of a supplemental or bid bulletin.

The Bidder, by the act of submitting its Bid, shall be deemed to have inspected the site, determined the general characteristics of the contracted Works and the conditions for this Project, such as the location and the nature of the work; (b) climatic conditions; (c) transportation facilities; (c) nature and condition of the terrain, geological conditions at the site communication facilities, requirements, location and availability of construction aggregates and other materials, labor, water, electric power and access roads; and (d) other factors that may affect the cost, duration and execution or implementation of the contract, project, or work and examine all instructions, forms, terms, and project requirements in the Bidding Documents.

4. Corrupt, Fraudulent, Collusive, Coercive, and Obstructive Practices

The Procuring Entity, as well as the Bidders and Contractors, shall observe the highest standard of ethics during the procurement and execution of the contract. They or through an agent shall not engage in corrupt, fraudulent, collusive, coercive, and obstructive practices defined under Annex "I" of the 2016 revised IRR of RA No. 9184 or other integrity violations in competing for the Project.

5. Eligible Bidders

5.1. Only Bids of Bidders found to be legally, technically, and financially capable will be evaluated.

5.2. The Bidder must have an experience of having completed a Single Largest Completed Contract (SLCC) that is similar to this Project, equivalent to at least fifty percent (50%) of the ABC adjusted, if necessary, by the Bidder to current prices using the PSA's CPI, except under conditions provided for in Section 23.4.2.4 of the 2016 revised IRR of RA No. 9184.

A contract is considered to be "similar" to the contract to be bid if it has the major categories of work stated in the **BDS**.

5.3. For Foreign-funded Procurement, the Procuring Entity and the foreign government/foreign or international financing institution may agree on another track record requirement, as specified in the Bidding Document prepared for this purpose.

5.4. The Bidders shall comply with the eligibility criteria under Section 23.4.2 of the 2016 IRR of RA No. 9184.

6. Origin of Associated Goods

There is no restriction on the origin of Goods other than those prohibited by a decision of the UN Security Council taken under Chapter VII of the Charter of the UN.

7. Subcontracts

7.1. The Bidder may subcontract portions of the Project to the extent allowed by the Procuring Entity as stated herein, but in no case more than fifty percent (50%) of the Project.

The Procuring Entity has prescribed that:

Subcontracting is not allowed.

7.2. Subcontracting of any portion of the Project does not relieve the Contractor of any liability or obligation under the Contract. The Supplier will be responsible for the acts, defaults, and negligence of any subcontractor, its agents, servants, or workmen as fully as if these were the Contractor's own acts, defaults, or negligence, or those of its agents, servants, or workmen.

8. Pre-Bid Conference

The Procuring Entity will hold a pre-bid conference for this Project on the specified date and time at its physical address at 012 J. dela Peña St., Brgy. 9, Amadeo, Cavite as indicated in paragraph 6 of the IB.

9. Clarification and Amendment of Bidding Documents

Prospective bidders may request for clarification on and/or interpretation of any part of the Bidding Documents. Such requests must be in writing and received by the Procuring Entity, either at its given address or through electronic mail indicated in the **IB**, at least ten (10) calendar days before the deadline set for the submission and receipt of Bids.

10. Documents Comprising the Bid: Eligibility and Technical Components

10.1. The first envelope shall contain the eligibility and technical documents of the Bid as specified in **Section IX. Checklist of Technical and Financial Documents**.

10.2. If the eligibility requirements or statements, the bids, and all other documents for submission to the BAC are in foreign language other than English, it must be accompanied by a translation in English, which shall be authenticated by the appropriate Philippine foreign service establishment, post, or the equivalent office having jurisdiction over the foreign bidder's affairs in the Philippines. For Contracting Parties to the Apostille Convention, only the translated documents shall be authenticated through an apostille pursuant to GPPB Resolution No. 13-2019 dated 23 May 2019. The English translation shall govern, for purposes of interpretation of the bid.

10.3. A valid PCAB License is required, and in case of joint ventures, a valid special PCAB License, and registration for the type and cost of the contract for this Project. Any additional type of Contractor license or permit shall be indicated in the **BDS**.

10.4. A List of Contractor's key personnel (e.g., Project Manager, Project Engineers, Materials Engineers, and Foremen) assigned to the contract to be bid, with their complete qualification and experience data shall be provided. These key personnel must meet the required minimum years of experience set in the **BDS**.

10.5. A List of Contractor's major equipment units, which are owned, leased, and/or under purchase agreements, supported by proof of ownership, certification of availability of equipment from the equipment lessor/vendor for the duration of the project, as the case may be, must meet the minimum requirements for the contract set in the **BDS**.

11. Documents Comprising the Bid: Financial Component

11.1. The second bid envelope shall contain the financial documents for the Bid as specified in **Section IX. Checklist of Technical and Financial Documents**.

11.2. Any bid exceeding the ABC indicated in paragraph 1 of the **IB** shall not be accepted.

11.3. For Foreign-funded procurement, a ceiling may be applied to bid prices provided the conditions are met under Section 31.2 of the 2016 revised IRR of RA No. 9184.

12. Alternative Bids

Bidders shall submit offers that comply with the requirements of the Bidding Documents, including the basic technical design as indicated in the drawings and specifications. Unless there is a value engineering clause in the **BDS**, alternative Bids shall not be accepted.

13. Bid Prices

All bid prices for the given scope of work in the Project as awarded shall be considered as fixed prices, and therefore not subject to price escalation during contract implementation, except under extraordinary circumstances as determined by the NEDA and approved by the GPPB pursuant to the revised Guidelines for Contract Price Escalation guidelines.

14. Bid and Payment Currencies

14.1. Bid prices may be quoted in the local currency or tradeable currency accepted by the BSP at the discretion of the Bidder. However, for purposes of bid evaluation, Bids denominated in foreign currencies shall be converted to Philippine currency based on the exchange rate as published in the BSP reference rate bulletin on the day of the bid opening.

14.2. Payment of the contract price shall be made in:

Philippine Pesos.

15. Bid Security

15.1. The Bidder shall submit a Bid Securing Declaration or any form of Bid Security in the amount indicated in the **BDS**, which shall be not less than the percentage of the ABC in accordance with the schedule in the **BDS**.

15.2. The Bid and bid security shall be valid until **4 November 2025.** Any bid not accompanied by an acceptable bid security shall be rejected by the Procuring Entity as non-responsive.

16. Sealing and Marking of Bids

Each Bidder shall submit **two (2) copies of the first and second components of its Bid, one (1) original and one (1) duplicate**.

The Procuring Entity may request additional hard copies and/or electronic copies of the Bid. However, failure of the Bidders to comply with the said request shall not be a ground for disqualification.

If the Procuring Entity allows the submission of bids through online submission to the given website or any other electronic means, the Bidder shall submit an electronic copy of its Bid, which must be digitally signed. An electronic copy that cannot be opened or is corrupted shall be considered non-responsive and, thus, automatically disqualified.

17. Deadline for Submission of Bids

The Bidders shall submit on the specified date and time and either at its physical address or through online submission as indicated in paragraph 7 of the **IB.**

18. Opening and Preliminary Examination of Bids

18.1. The BAC shall open the Bids in public at the time, on the date, and at the place specified in paragraph 9 of the **IB**. The Bidders' representatives who are present shall sign a register evidencing their attendance. In case videoconferencing, webcasting or other similar technologies will be used, attendance of participants shall likewise be recorded by the BAC Secretariat.

In case the Bids cannot be opened as scheduled due to justifiable reasons, the rescheduling requirements under Section 29 of the 2016 revised IRR of RA No. 9184 shall prevail.

18.2. The preliminary examination of Bids shall be governed by Section 30 of the 2016 revised IRR of RA No. 9184.

19. Detailed Evaluation and Comparison of Bids

19.1. The Procuring Entity's BAC shall immediately conduct a detailed evaluation of all Bids rated "*passed*" using non-discretionary pass/fail criteria. The BAC shall consider the conditions in the evaluation of Bids under Section 32.2 of 2016 revised IRR of RA No. 9184.

19.2. If the Project allows partial bids, all Bids and combinations of Bids as indicated in the **BDS** shall be received by the same deadline and opened and evaluated simultaneously so as to determine the Bid or combination of Bids offering the lowest calculated cost to the Procuring Entity. Bid Security as required by **ITB** Clause 15 shall be submitted for each contract (lot) separately.

19.3. In all cases, the NFCC computation pursuant to Section 23.4.2.6 of the 2016 revised IRR of RA No. 9184 must be sufficient for the total of the ABCs for all the lots participated in by the prospective Bidder.

20. Post Qualification

Within a non-extendible period of five (5) calendar days from receipt by the Bidder of the notice from the BAC that it submitted the Lowest Calculated Bid, the Bidder shall submit its latest income and business tax returns filed and paid through the BIR Electronic Filing and Payment System (eFPS), and other appropriate licenses and permits required by law and stated in the **BDS**.

21. Signing of the Contract

The documents required in Section 37.2 of the 2016 revised IRR of RA No. 9184 shall form part of the Contract. Additional Contract documents are indicated in the **BDS**.

Section III.

Bid Data Sheet

Bid Data Sheet

<table>
<tr><th>ITB Clause</th><th></th></tr>
<tr><td>5.2</td><td>For this purpose, contracts similar to the Project refer to contracts which have the same major categories of work, which shall be:
Pipe laying works and installation of fittings and appurtenances</td></tr>
<tr><td>7.1</td><td>Subcontracting is not allowed.</td></tr>
<tr><td>10.3</td><td>No other Contractor license or permit required aside from PCAB.</td></tr>
<tr><td>10.4</td><td>The key personnel must meet the required minimum years of experience set below:
<table>
<tr><th>Key Personnel</th><th>General Experience</th><th>Relevant Experience</th></tr>
<tr><td>• Project/Site Engineer
• Safety Officer
• Foreman
• Skilled Workers
• Laborers</td><td>- A licensed Civil Engineer with at least one (1) year experience as Project Engineer duly accredited by DPWH
- Undergone Construction Safety and Health Training
- With at least one (1) year experience as Foreman
- 2 to 3 years
- 2 to 3 years</td><td>With at least 3 years work experience in pipe laying/plumbing works</td></tr>
</table></td></tr>
<tr><td>10.5</td><td>The minimum major equipment requirements are the following:
<table>
<tr><th>Equipment</th><th>Capacity</th><th>Number of Units</th></tr>
<tr><td>• Power Tools
• Jackhammer
• Concrete cutter
• Dump Truck/Vehicle
• Other tools related to the project</td><td></td><td>At least 2</td></tr>
</table></td></tr>
<tr><td>12</td><td>Not Applicable</td></tr>
<tr><td>15.1</td><td>The bid security shall be in the form of a Bid Securing Declaration or any of the following forms and amounts:</td></tr>
</table>

	a. The amount of not less than **Forty One Thousand Seven Hundred Sixty Five Pesos and Sixty Five Centavos (PhP 41,765.65),** if bid security is in cash, cashier's/manager's check, bank draft/guarantee or irrevocable letter of credit; b. The amount of not less than **One Hundred Four Thousand Four Hundred Fourteen Pesos and Twelve Centavos (PhP 104,414.12)** if bid security is in Surety Bond.
16	Physical Submission of Bids: **Each Bidder shall submit one (1) original and one (1) duplicate copies of the first and second components of its bid.**
19.2	**Partial bids are not allowed.**
20	**All necessary licenses and permits required for the project to be secured at the barangay, municipal, provincial and national (DPWH) level, if applicable, shall be secured by and at the expense of the Contractor.**
21	Additional contract documents relevant to the Project that may be required by existing laws and/or the Procuring Entity, such as construction schedule and S-curve, manpower schedule, construction methods, equipment utilization schedule, construction safety and health program approved by the DOLE, and other acceptable tools of project scheduling.

Section IV.

General Conditions of Contract

1. Scope of Contract

This Contract shall include all such items, although not specifically mentioned, that can be reasonably inferred as being required for its completion as if such items were expressly mentioned herein. All the provisions of RA No. 9184 and its 2016 revised IRR, including the Generic Procurement Manual, and associated issuances, constitute the primary source for the terms and conditions of the Contract, and thus, applicable in contract implementation. Herein clauses shall serve as the secondary source for the terms and conditions of the Contract.

This is without prejudice to Sections 74.1 and 74.2 of the 2016 revised IRR of RA No. 9184 allowing the GPPB to amend the IRR, which shall be applied to all procurement activities, the advertisement, posting, or invitation of which were issued after the effectivity of the said amendment.

2. Sectional Completion of Works

If sectional completion is specified in the **Special Conditions of Contract (SCC)**, references in the Conditions of Contract to the Works, the Completion Date, and the Intended Completion Date shall apply to any Section of the Works (other than references to the Completion Date and Intended Completion Date for the whole of the Works).

3. Possession of Site

3.1 The Procuring Entity shall give possession of all or parts of the Site to the Contractor based on the schedule of delivery indicated in the **SCC,** which corresponds to the execution of the Works. If the Contractor suffers delay or incurs cost from failure on the part of the Procuring Entity to give possession in accordance with the terms of this clause, the Procuring Entity's Representative shall give the Contractor a Contract Time Extension and certify such sum as fair to cover the cost incurred, which sum shall be paid by Procuring Entity.

3.2 If possession of a portion is not given by the above date, the Procuring Entity will be deemed to have delayed the start of the relevant activities. The resulting adjustments in contract time to address such delay may be addressed through contract extension provided under Annex "E" of the 2016 revised IRR of RA No. 9184.

4. The Contractor's Obligations

The Contractor shall employ the key personnel named in the Schedule of Key Personnel indicating their designation, in accordance with **ITB** Clause 10.3 and specified in the **BDS**, to carry out the supervision of the Works.

The Procuring Entity will approve any proposed replacement of key personnel only if their relevant qualifications and abilities are equal to or better than those of the personnel listed in the Schedule.

5. Performance Security

5.1. Within ten (10) calendar days from receipt of the Notice of Award from the Procuring Entity but in no case later than the signing of the contract by both parties, the successful Bidder shall furnish the performance security in any of the forms prescribed in Section 39 of the 2016 revised IRR.

5.2. The Contractor, by entering into the Contract with the Procuring Entity, acknowledges the right of the Procuring Entity to institute action pursuant to RA No. 3688 against any subcontractor be they an individual, firm, partnership, corporation, or association supplying the Contractor with labor, materials and/or equipment for the performance of this Contract.

6. Site Investigation Reports

The Contractor, in preparing the Bid, shall rely on any Site Investigation Reports referred to in the **SCC** supplemented by any information obtained by the Contractor.

7. Warranty

7.1. In case the Contractor fails to undertake the repair works under Section 62.2.2 of the 2016 revised IRR, the Procuring Entity shall forfeit its performance security, subject its property(ies) to attachment or garnishment proceedings, and perpetually disqualify it from participating in any public bidding. All payables of the GOP in his favor shall be offset to recover the costs.

7.2. The warranty against Structural Defects/Failures, except that occasioned-on force majeure, shall cover the period from the date of issuance of the Certificate of Final Acceptance by the Procuring Entity. Specific duration of the warranty is found in the **SCC**.

8. Liability of the Contractor

Subject to additional provisions, if any, set forth in the **SCC**, the Contractor's liability under this Contract shall be as provided by the laws of the Republic of the Philippines.

If the Contractor is a joint venture, all partners to the joint venture shall be jointly and severally liable to the Procuring Entity.

9. Termination for Other Causes

Contract termination shall be initiated in case it is determined *prima facie* by the Procuring Entity that the Contractor has engaged, before, or during the implementation of the contract, in unlawful deeds and behaviors relative to contract acquisition and implementation, such as, but not limited to corrupt, fraudulent, collusive, coercive, and obstructive practices as stated in **ITB** Clause 4.

10. Dayworks

Subject to the guidelines on Variation Order in Annex "E" of the 2016 revised IRR of RA No. 9184, and if applicable as indicated in the **SCC**, the Dayworks rates in the Contractor's Bid shall be used for small additional amounts of work only when the Procuring Entity's Representative has given written instructions in advance for additional work to be paid for in that way.

11. Program of Work

11.1. The Contractor shall submit to the Procuring Entity's Representative for approval the said Program of Work showing the general methods, arrangements, order, and timing for all the activities in the Works. The submissions of the Program of Work are indicated in the **SCC.**

11.2. The Contractor shall submit to the Procuring Entity's Representative for approval an updated Program of Work at intervals no longer than the period stated in the **SCC.** If the Contractor does not submit an updated Program of Work within this period, the Procuring Entity's Representative may withhold the amount stated in the **SCC** from the next payment certificate and continue to withhold this amount until the next payment after the date on which the overdue Program of Work has been submitted.

12. Instructions, Inspections and Audits

The Contractor shall permit the GOP or the Procuring Entity to inspect the Contractor's accounts and records relating to the performance of the Contractor and to have them audited by auditors of the GOP or the Procuring Entity, as may be required.

13. Advance Payment

The Procuring Entity shall, upon a written request of the Contractor which shall be submitted as a Contract document, make an advance payment to the Contractor in an amount not exceeding fifteen percent (15%) of the total contract price, to be made in lump sum, or at the most two installments according to a schedule specified in the **SCC**, subject to the requirements in Annex "E" of the 2016 revised IRR of RA No. 9184.

14. Progress Payments

The Contractor may submit a request for payment for Work accomplished. Such requests for payment shall be verified and certified by the Procuring Entity's Representative/Project Engineer. Except as otherwise stipulated in the **SCC**, materials and equipment delivered on the site but not completely put in place shall not be included for payment.

15. Operating and Maintenance Manuals

15.1. If required, the Contractor will provide "as built" Drawings and/or operating and maintenance manuals as specified in the **SCC.**

15.2. If the Contractor does not provide the Drawings and/or manuals by the dates stated above, or they do not receive the Procuring Entity's Representative's approval, the Procuring Entity's Representative may withhold the amount stated in the **SCC** from payments due to the Contractor.

Section V.

Special Conditions of Contract

Special Conditions of Contract

GCC Clause	
2	The Intended Completion Date is a total of **Sixty (60) Calendar Days** from the date of receipt of the Notice to Proceed. The project is composed of two (2) sections as follows: a. Expansion of 4"Ø and 3"Ø Mainline Pipelaying at Barangay Salaban b. Partial Expansion of 3"Ø and 2"Ø Distribution Lines in Barangay Halang, Phase 2 (Halang – Alingaro Road)
4.1	**Not Applicable**
6	The site investigation reports are: **None required**
7.2	**Workmanship – One (1) Year upon Acceptance**
10	**No dayworks are applicable to the contract.**
11.1	The Contractor shall submit the Program of Work to the Procuring Entity's Representative within **ten (10) days** of delivery of the Notice of Award.
11.2	The amount to be withheld for late submission of an updated Program of Work is **One Thousand Pesos (PhP 1,000.00).**
13	The amount of the advance payment is **15% of the total contract price and schedule of payment shall be based in the percentage accomplishment in every progress billing** which shall be given to the Contractor not later than fifteen (15) calendar days from receipt by the Procuring Entity of the Contractor's request, subject to the requirements under GCC Clause 13. Said period shall be exclusive of the time necessitated by and as a result of external factors such as pre-audit of the request for advance payment.
14	Materials and equipment delivered on the site but not completely put in place shall be included for payment.
15.1	The date by which "as built" drawings are required is **five (5) days after completion of works of each type/section.**
15.2	The amount to be withheld for failing to produce "as built" drawings and/or operating and maintenance manuals by the date required is **One Thousand Pesos (PhP 1,000.00) for every day of delay.** The request for final payment shall not be processed pending submission and approval of the "**As Built Plans**" and other required documents as stipulated in SCC Clause 2.

Section VI.

Specifications

I. EXPANSION OF 4”Ø AND 3”Ø MAINLINE PIPELAYING AT BARANGAY SALABAN			
Supply and Delivery of MATERIALS			
A. PIPES AND FITTINGS			
Item No.	**Description/Specification**	**Quantity**	**Statement of Compliance**
1	4”Ø uPVC Pipe Class 100	111 pcs	
2	3”Ø uPVC Pipe Class 100	77 pcs	
3	4”Ø C.I. Mech. Valve	5 pcs	
4	3”Ø C.I. Mech. Valve	4 pcs	
5	2”Ø Mech. Valve	1pc	
6	4”Ø C.I. Mech. Tee	2 pcs	
7	3”Ø C.I. Mech. Tee	1 pc	
8	4”Ø Mech. Sleeve Type Coupling	6 pcs	
9	3”Ø Mech. Sleeve Type Coupling	4 pcs	
10	2”Ø Mech. Sleeve Type Coupling	2 pcs	
11	4”Ø x 3 UPVC Coupling Reducer	2 pcs	
12	3”Ø x 2 UPVC Coupling Reducer	1 pc	
13	4”Ø (45°) C.I. Mech. Elbow	2 pcs	
14	3”Ø (90°) C.I. Mech. Elbow	1 pc	
15	3”Ø (45°) C.I. Mech. Elbow	1 pc	
16	4”Ø C.I. Mech. End Cap	1 pc	
17	2x2”Ø C.I Tee Mech. Type	1 pc	
18	2”Ø Mech. Elbow 90°	1 pc	
19	6”Ø C.I. Mech. Valve Box Cover	10 pcs	
20	6”Ø Sanitary Pipe Orange	3 pcs	
B. RESTORATION MATERIALS			
Item No.	**Description/ Specification**	**Quantity**	**Statement of Compliance**
1	Ready-mix concrete 2,500 PSI 28 days design	9.30 m^{3}	

II. PARTIAL EXPANSION OF 3”Ø AND 2”Ø DISTRIBUTION LINES IN BARANGAY HALANG, PHASE 2 (HALANG - ALINGARO ROAD)			
Supply and Delivery of MATERIALS			
A. PIPES AND FITTINGS			
Item No.	**Description/Specification**	**Quantity**	**Statement of Compliance**
1	3”Ø uPVC Pipe Class 100	110 pcs	
2	2”Ø uPVC Pipe Class 100	62 pcs	
3	3”Ø C.I. Mech. Valve	2 pcs	
4	2”Ø Mech. Valve	2 pcs	
5	3”Ø x 2” UPVC Coupling Reducer	1 pc	
6	3”Ø Mech. Sleeve Type Coupling	4 pcs	
7	2”Ø Mech. Sleeve Type Coupling	2 pcs	
8	6”Ø C.I. Mech. Valve Box Cover	4 pcs	
9	6”Ø Sanitary Pipe Orange	3 pcs	
B. RESTORATION MATERIALS			
Item No.	**Description/ Specification**	**Quantity**	**Statement of Compliance**
1	Ready-mix concrete 2,500 PSI 28 days design	12.90 m^3	

Section VII.

Drawings

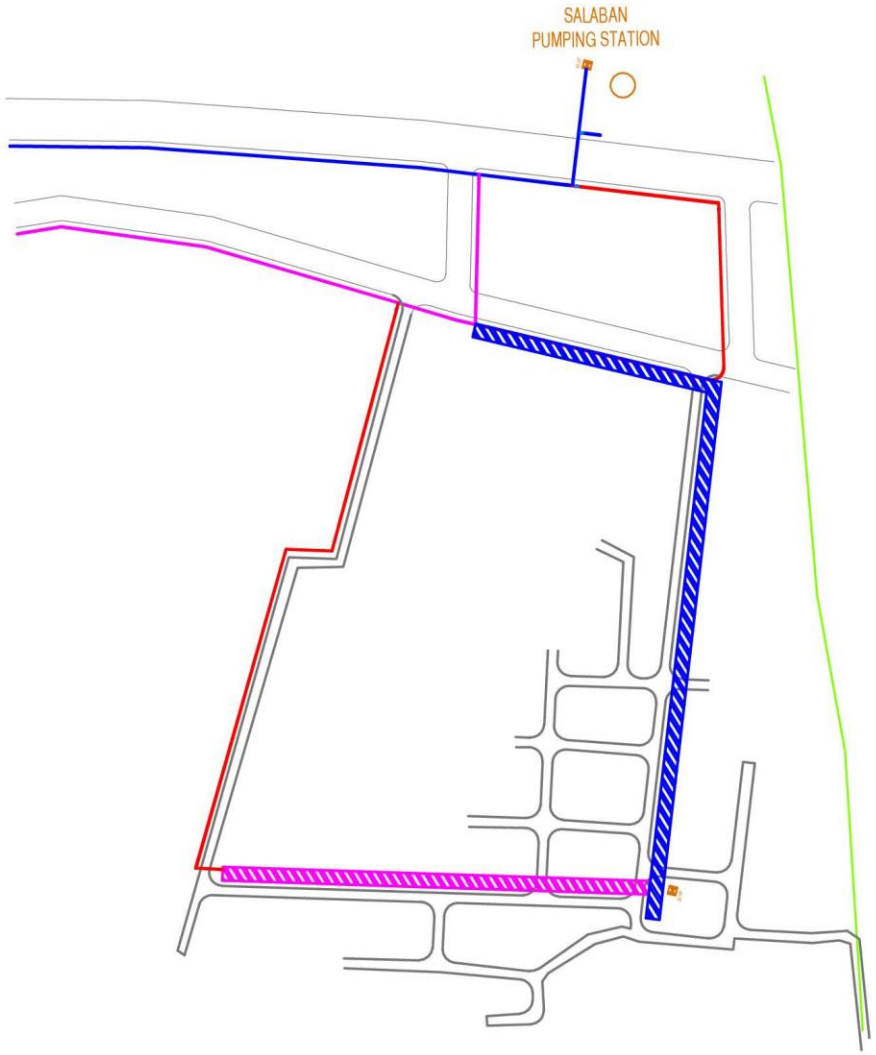

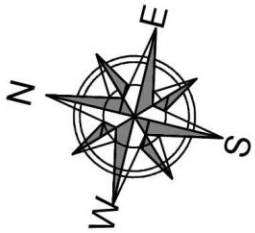

SALABAN

LEGEND :

Proposed 4" dia Pipeline

Proposed 3" dia Pipeline

PROJECT :	Prepared By:	Approved By:	SHEET CONTENTS :	SHEET NO.
PROPOSED 4" & 3" PIPELINE	Engr. RHODERICK L. MARANAN Division Manager C	Engr. NILO C. DELA PEÑA General Manager	AS SHOWN	P 1
LOCATION: Manhilo Brgy. Salaban, Amadeo, Cavite			DRAWN BY : Yhesk	DATE :

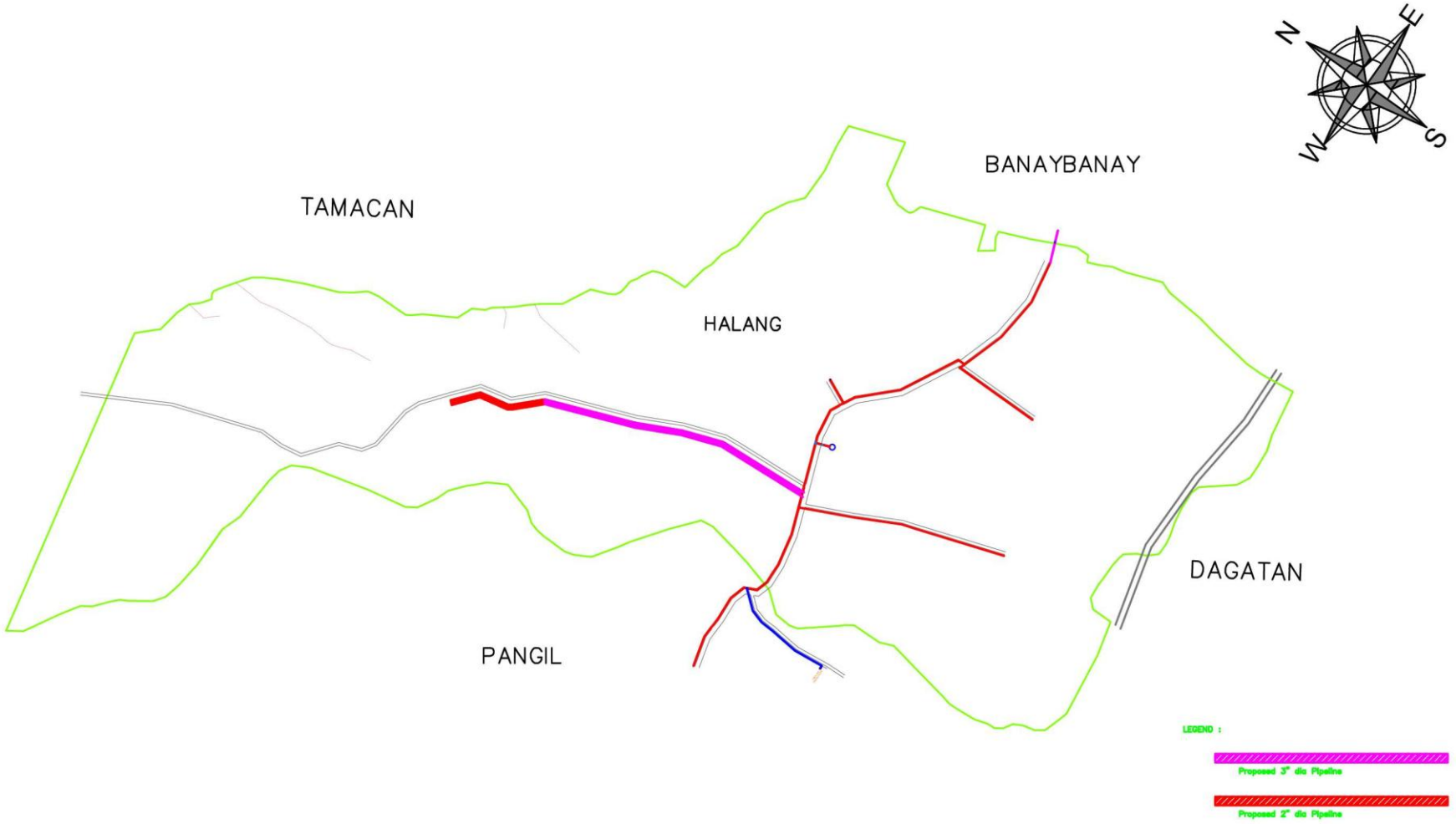

PROJECT :	Prepared By:	Approved By:	SHEET CONTENTS :	SHEET NO.
PROPOSED 3" & 2" PIPELINE	Engr. RHODERICK L. MARANAN Senior Engineer A.	Engr. NILO C. DELA PEÑA General Manager	AS SHOWN	P 1
LOCATION: Western portion of Halang road to Alingaro (DAU to IDP Layering Farm), Amadeo, Cavite			DRAWN BY : Yhesk DATE :	

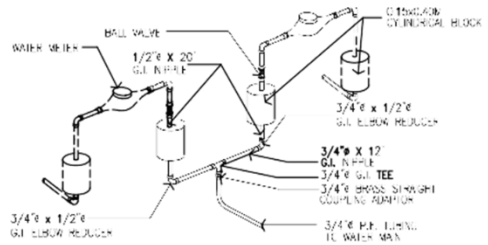

ISOMETRIC

1 DOUBLE HOUSE CONNECTION DETAIL
NOT TO SCALE

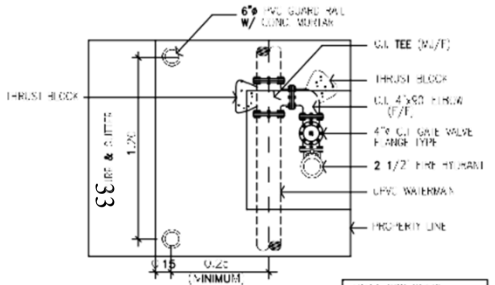

PLAN

VALVE BOX DETAIL (SEE GATE VALVE DETAIL)

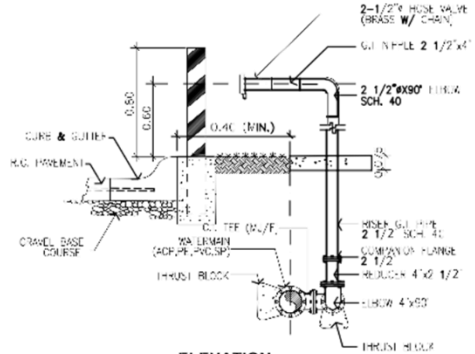

ELEVATION

4 FIRE HYDRANT DETAIL
NOT TO SCALE

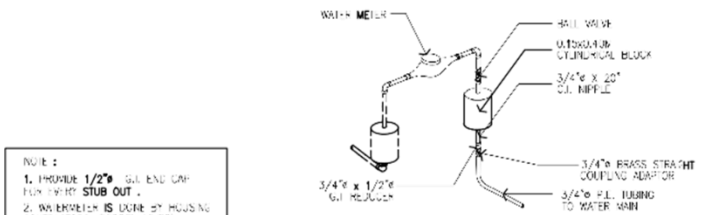

ISOMETRIC

NOTE :
1. PROVIDE 1/2"ø G.I. END CAP FOR FUTURE STUB OUT .
2. WATERMETER IS DONE BY HOUSING CONTRACTORS. (HIDDEN LINES)

2 SINGLE HOUSE CONNECTION DETAIL
NOT TO SCALE

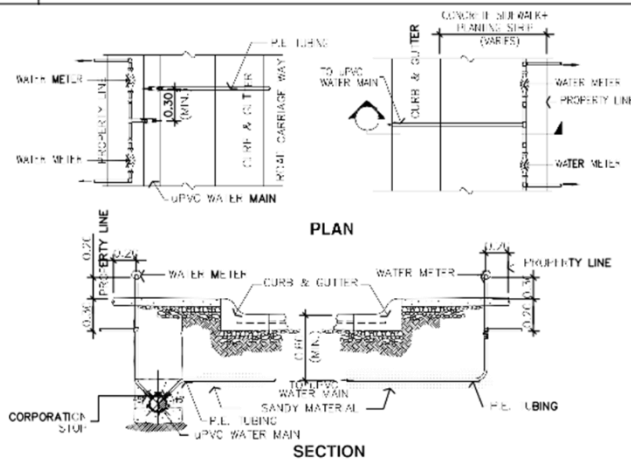

3 HOUSE SERVICE CONNECTION DETAIL
NOT TO SCALE

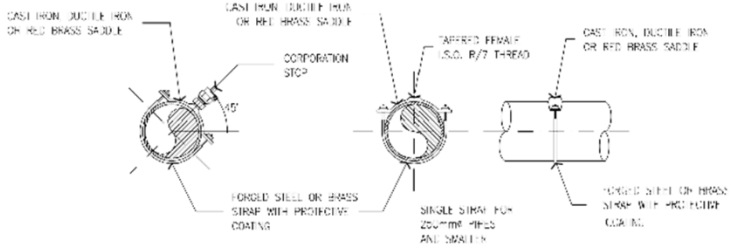

5 TYPICAL SADDLE CLAMP INSTALLATION
NOT TO SCALE

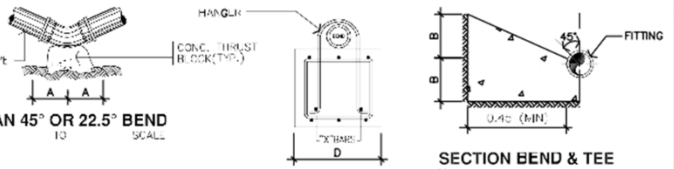

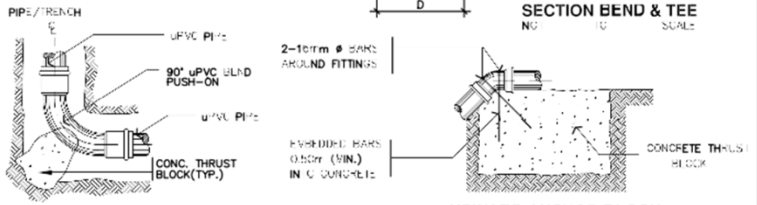

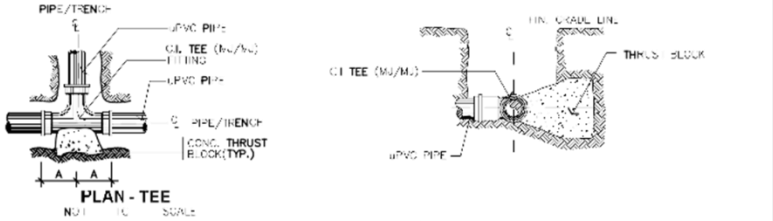

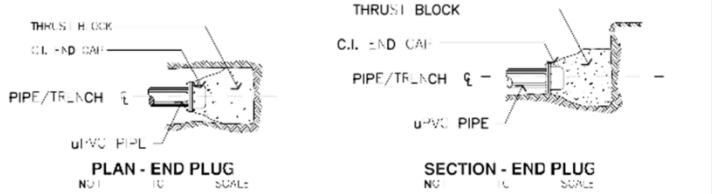

6 THRUST BLOCK DETAIL
NOT TO SCALE

SIZE (mm)	90°BEND A (M)	90°BEND B (M)	TEE A (M)	TEE B (M)	45°BEND A (M)	45°BEND B (M)	22 1/2°BEND A (M)	22 1/2°BEND B (M)
100	0.28	0.20	0.13	0.28	0.15	0.20	0.13	0.18
150	0.40	0.25	0.25	0.30	0.20	0.25	0.15	0.20
200	0.60	0.35	0.25	0.40	0.30	0.35	0.20	0.25
250	0.65	0.45	0.40	0.50	0.35	0.45	0.25	0.30

1. REDUCE OR INCREASE AREAS PROPORTIONATELY TO SUIT ACTUAL FIELD CONDITIONS. ALL CONC. THRUST BLOCKS SHALL BE CLASS"B"(2500PSI)
2. ALL FITTINGS SHALL BE CAST IRON SUITABLE FOR PVC PIPE CONNECTIONS.
3. ABOVE AREAS BASED ON AN ALLOWABLE SOIL BEARING PRESSURE OF 100 KILO-PASCALS (KPa).
4. REDUCE OR INCREASE AREAS PROPORTIONALLY TO SUIT ACTUAL FIELD CONDITIONS UPON APPROVAL OF PROJECT ENGINEER.
5. CONCRETE STRENGTH FOR THRUST BLOCK SHALL BE 17 MEGA-PASCALS (MPa) MINIMUM.
6. UPWARD ANCHOR BLOCK DIMENSIONS BASED ON INTERNAL PRESSURE OF 100 METERS OF WATER COLUMN AND A SAFETY FACTOR OF 1.5.
7. BEARING AREA FOR DOWNWARD THRUST BLOCK BASED ON INTERNAL PRESSURE OF 100 METERS OF WATER COLUMN AND AN ASSUMED DEAD LOAD OF 10% DOWNWARD THRUST.
8. POUR CONCRETE THRUST BLOCK ON UNDISTURBED SOIL.

7 GENERAL NOTES

PROJECT :	Prepared by:	Approved by:	SHEET CONTENTS :	SHEET NO.
PROPOSED 4" PIPELINE	Engr. RHODERICK L. MARANAN Senior Engineer A	Engr. NILO C. DELA PEÑA General Manager	AS SHOWN	1 / 2
LOCATION: Pongol Deep Tubig Station to Sitio Mabini, Brgy. Pongol, Arevalo, Davao			DRAWN BY :Check	DATE :

Section VIII.
Bill of Quantities

Project Identification Number: AWD PB 2025-005

Name of Project: SUPPLY OF LABOR AND MATERIALS FOR THE EXPANSION OF DISTRIBUTION LINES OF AMADEO WATER DISTRICT IN BARANGAY SALABAN AND BARANGAY HALANG

I. EXPANSION OF 4"Ø AND 3"Ø MAINLINE PIPELAYING AT BARANGAY SALABAN **Length: - 666 meters (4"Ø UPVC Pipe)** **- 462 meters (3"Ø UPVC Pipe)**			
SCOPE OF WORK	**QUANTITY**	**UNIT**	**AMOUNT**
A. Supply of labor			
a. EXCAVATION WORKS / BACKFILLING WORKS 4"Ø	666	m	
b. EXCAVATION WORKS / BACKFILLING WORKS 3"Ø	462	m	
c. PIPE LAYING/ INSTALLATION OF FITTINGS & APPURTENANCES	1,128	m	
d. DEMOLITION & RESTORATION WORKS/ HAULING OF DEBRIS	155	m	
e. ROAD CROSSING BY BORING	6	m	
f. HYDROTESTING/ DISINFECTION/ TESTING & COMMISSIONING	1,128	m	
B. Supply of Materials			
g. SUPPLY AND DELIVERY OF PIPES AND FITTINGS	1	lot	
h. SUPPLY AND DELIVERY OF RESTORATION MATERIALS	9.30	m^3	
TOTAL COST			

II. PARTIAL EXPANSION OF 3"Ø AND 2"Ø DISTRIBUTION LINES IN BARANGAY HALANG, PHASE 2 (HALANG - ALINGARO ROAD) **Length: - 660 meters (3"Ø UPVC Pipe)** **- 372 meters (2"Ø UPVC Pipe)**			
SCOPE OF WORK	**QUANTITY**	**UNIT**	**AMOUNT**
A. Supply of labor			
a. EXCAVATION WORKS / BACKFILLING WORKS 3"Ø	660	m	

b. EXCAVATION WORKS / BACKFILLING WORKS 2"Ø	372	M	
c. PIPE LAYING/ INSTALLATION OF FITTINGS & APPURTENANCES	1,032	m	
d. DEMOLITION/ RESTORATION/ HAULING OF DEBRIS	215	m	
e. HYDROTESTING/ DISINFECTION/ TESTING & COMMISSIONING	1,032	m	
B. Supply of Materials			
f. SUPPLY AND DELIVERY OF PIPES AND FITTINGS	1	lot	
g. SUPPLY AND DELIVERY OF RESTORATION MATERIALS	12.90	m^3	
TOTAL COST			
SUPPLY OF LABOR AND MATERIALS FOR THE EXPANSION OF DISTRIBUTION LINES OF AMADEO WATER DISTRICT IN BARANGAY SALABAN AND BARANGAY HALANG			
GRAND TOTAL COST			**PhP 2,088,282.40**

***** Total ABC is inclusive of 10% Contractor's Profit and 7% VAT.

Amadeo Water District

BILL OF QUANTITIES

Project Identification Number: **AWD PB 2025-005**
Name of Project: **SUPPLY OF LABOR AND MATERIALS FOR THE EXPANSION OF DISTRIBUTION LINES OF AMADEO WATER DISTRICT IN BARANGAY SALABAN AND BARANGAY HALANG**

Locations of Project:

a. **MONTVIDA SUBDIVISION TO SALABAN ELEMENTARY SCHOOL AT DAANG LUMA ROAD**
b. **MONTVIDA SUBDIVISION TO KONSEHALA COSING ROAD**
c. **WESTERN PORTION OF HALANG ROAD TO ALINGARO (DALI STORE IN HALANG TO EIP LAYERING FARM)**

ABC: ₱ 2,088,282.40
(Inclusive of 10% Contractor's Profit and 7% VAT)

Item No.	Description	Quantity	Unit	Unit Price (Pesos)	Amount (Pesos)
I	**EXPANSION OF 4"Ø AND 3"Ø MAINLINE PIPELAYING AT BARANGAY SALABAN**				
A	***Supply of Labor***				
1	**EXCAVATION WORKS / BACKFILLING WORKS 4"Ø**	666	m		
2	**EXCAVATION WORKS / BACKFILLING WORKS 3"Ø**	462	m		
3	**PIPE LAYING/ INSTALLATION OF FITTINGS & APPURTENANCES**	1,128	m		
4	**ROAD CROSSING BY BORING**	6	m		
5	**DEMOLITION & RESTORATION WORKS/ HAULING OF DEBRIS**	155	m		
6	**HYDROTESTING/ DISINFECTION/ TESTING & COMMISSIONING**	1,128	m		
B	***Supply of Materials***				
7	**SUPPLY AND DELIVERY OF PIPES AND FITTINGS**	1	lot		
8	**SUPPLY AND DELIVERY OF RESTORATION MATERIALS**	9.30	m^3		
TOTAL					P _____
II	**PARTIAL EXPANSION OF 3"Ø AND 2"Ø DISTRIBUTION LINES IN BARANGAY HALANG, PHASE 2 (HALANG - ALINGARO ROAD)**				

C	***Supply of Labor***				
9	**EXCAVATION WORKS / BACKFILLING WORKS 3"Ø**	666	m		
10	**EXCAVATION WORKS / BACKFILLING WORKS 2"Ø**	372	m		
11	**PIPE LAYING/ INSTALLATION OF FITTINGS & APPURTENANCES**	1,032	m		
12	**DEMOLITION & RESTORATION WORKS/ HAULING OF DEBRIS**	215	m		
14	**HYDROTESTING/ DISINFECTION/ TESTING & COMMISSIONING**	1,032	m		
D	***Supply of Materials***				
15	**SUPPLY AND DELIVERY OF PIPES AND FITTINGS**	1	lot		
16	**SUPPLY AND DELIVERY OF RESTORATION MATERIALS**	12.90	m^3		
TOTAL					P _____
GRAND TOTAL					P _____
(Write grand total in words) _____ _____ _____					

Submitted by: _____ *Date:* _____

Name of Bidder/Bidder's Representative: _____

Position: _____

Name of Bidder: _____

A. SUPPLY OF LABOR AND MATERIALS FOR THE EXPANSION OF DISTRIBUTION LINES OF AMADEO WATER DISTRICT IN BARANGAY SALABAN AND BARANGAY HALANG

1. Site Inspection is a must.
2. The project should be completed within **60 calendar days**.
3. Locations of project and length of pipe laying:
   a. Montvida Subdivision to Salaban Elementary School at Daang Luma Road – 666 meters
   b. Montvida Subdivision to Konsehala Cosing Road – 462 meters
   c. Western portion of Halang road to Alingaro (DALI Store in Halang to EIP Layering Farm) – 1,032 meters

B. TECHNICAL DESCRIPTION

1. **EXCAVATION WORKS**
   a. This work includes excavation of soil to 0.80 meters x 0.30 meters.
   b. The area should be cleared before and after the excavation.
2. **PIPE LAYING WORKS**
   a. Pipe laying should be at the desired depth to avoid imminent damage when there are road and canal construction.
   b. UPVC pipes should be properly connected to avoid leakages.
3. **DEMOLITION OF CONCRETE PAVEMENTS AND DRIVE WAYS**
   a. Demolition of 6” to 8” concrete pavements and driveways
      Concrete cutter should be used to prevent further damage to concrete.
   b. Hauling of debris.
4. **INSTALLATION OF FITTINGS AND APPURTENANCES**
   a. Good workmanship on the installation of fittings should be observed to avoid leakages.
   b. Provide thrust blocks on fittings to avoid leakages when high pressure occurs.
5. **BACK FILLING WORKS**
   a. Backfilling materials should be free from rocks and hard materials to avoid leakages from pipes when tampered.
   b. Tampering of backfill materials to desired level of road.
6. **HYDROTESTING AND DISINFECTION**
   a. 100 PSI at 24 hours hydro testing should be attained without leakages.
   b. Put chlorine for 24 hours and flush the line after chlorination.
7. **RESTORATION WORKS**
   a. All demolished concrete pavements shall be restored with ready mix concrete 28 days design and 2,500 PSI

Section IX.

Checklist of Technical and Financial Documents

Checklist of Technical and Financial Documents

I. TECHNICAL COMPONENT ENVELOPE

Class "A" Documents

Legal Documents

☐ (a) Valid PhilGEPS Registration Certificate (Platinum Membership) (all pages);
or

☐ (b) Registration certificate from Securities and Exchange Commission (SEC), Department of Trade and Industry (DTI) for sole proprietorship, or Cooperative Development Authority (CDA) for cooperatives or its equivalent document;
and

☐ (c) Mayor's or Business permit issued by the city or municipality where the principal place of business of the prospective bidder is located, or the equivalent document for Exclusive Economic Zones or Areas;
and

☐ (e) Tax clearance per E.O. No. 398, s. 2005, as finally reviewed and approved by the Bureau of Internal Revenue (BIR).

Technical Documents

☐ (f) Statement of the prospective bidder of all its ongoing government and private contracts, including contracts awarded but not yet started, if any, whether similar or not similar in nature and complexity to the contract to be bid; **and**

☐ (g) Statement of the bidder's Single Largest Completed Contract (SLCC) similar to the contract to be bid, except under conditions provided under the rules;
and

☐ (h) Philippine Contractors Accreditation Board (PCAB) License;
or
Special PCAB License in case of Joint Ventures;
and registration for the type and cost of the contract to be bid; **and**

☐ (i) Original copy of Bid Security. If in the form of a Surety Bond, submit also a certification issued by the Insurance Commission;
or
Original copy of Notarized Bid Securing Declaration; **and**

(j) Project Requirements, which shall include the following:

☐ a. Organizational chart for the contract to be bid;

☐ b. List of contractor's key personnel (*e.g.*, Project Manager, Project Engineers, Materials Engineers, and Foremen), to be assigned to the contract to be bid, with their complete qualification and experience data;

☐ c. List of contractor's major equipment units, which are owned, leased, and/or under purchase agreements, supported by proof of ownership or

certification of availability of equipment from the equipment lessor/vendor for the duration of the project, as the case may be; **and**

☐ (k) Original duly signed Omnibus Sworn Statement (OSS);
and if applicable, Original Notarized Secretary's Certificate in case of a corporation, partnership, or cooperative; or Original Special Power of Attorney of all members of the joint venture giving full power and authority to its officer to sign the OSS and do acts to represent the Bidder.

Financial Documents

☐ (l) The prospective bidder's audited financial statements, showing, among others, the prospective bidder's total and current assets and liabilities, stamped "received" by the BIR or its duly accredited and authorized institutions, for the preceding calendar year which should not be earlier than two (2) years from the date of bid submission; **and**

☐ (m) The prospective bidder's computation of Net Financial Contracting Capacity (NFCC).

Class "B" Documents

☐ (n) If applicable, duly signed joint venture agreement (JVA) in accordance with RA No. 4566 and its IRR in case the joint venture is already in existence;
or
duly notarized statements from all the potential joint venture partners stating that they will enter into and abide by the provisions of the JVA in the instance that the bid is successful.

II. FINANCIAL COMPONENT ENVELOPE

☐ (o) Original of duly signed and accomplished Financial Bid Form; **and**

Other documentary requirements under RA No. 9184

☐ (p) Original of duly signed Bid Prices in the Bill of Quantities; **and**

☐ (q) Duly accomplished Detailed Estimates Form, including a summary shee indicating the unit prices of construction materials, labor rates, and equipmen rentals used in coming up with the Bid; **and**

☐ (r) Cash Flow by Quarter.

Bid Form for the Procurement of Infrastructure Projects

[shall be submitted with the Bid]

BID FORM

Date : _____

Project Identification No. : _____

To: [name and address of Procuring Entity]

Having examined the Philippine Bidding Documents (PBDs) including the Supplemental or Bid Bulletin Numbers *[insert numbers],* the receipt of which is hereby duly acknowledged, we, the undersigned, declare that:

a. We have no reservation to the PBDs, including the Supplemental or Bid Bulletins, for the Procurement Project: *[insert name of contract];*

b. We offer to execute the Works for this Contract in accordance with the PBDs;

c. The total price of our Bid in words and figures, excluding any discounts offered below is: *[insert information]*;

d. The discounts offered and the methodology for their application are: *[insert information]*;

e. The total bid price includes the cost of all taxes, such as, but not limited to: *[specify the applicable taxes, e.g. (i) value added tax (VAT), (ii) income tax, (iii) local taxes, and (iv) other fiscal levies and duties],* which are itemized herein and reflected in the detailed estimates,

f. Our Bid shall be valid within the a period stated in the PBDs, and it shall remain binding upon us at any time before the expiration of that period;

g. If our Bid is accepted, we commit to obtain a Performance Security in the amount of *[insert percentage amount]* percent of the Contract Price for the due performance of the Contract, or a Performance Securing Declaration in lieu of the the allowable forms of Performance Security, subject to the terms and conditions of issued GPPB guidelines[2] for this purpose;

h. We are not participating, as Bidders, in more than one Bid in this bidding process, other than alternative offers in accordance with the Bidding Documents;

i. We understand that this Bid, together with your written acceptance thereof included in your notification of award, shall constitute a binding contract between us, until a formal Contract is prepared and executed; and

---

[2] currently based on GPPB Resolution No. 09-2020

j. We understand that you are not bound to accept the Lowest Calculated Bid or any other Bid that you may receive.

k. We likewise certify/confirm that the undersigned, is the duly authorized representative of the bidder, and granted full power and authority to do, execute and perform any and all acts necessary to participate, submit the bid, and to sign and execute the ensuing contract for the [Name of Project] of the [Name of the Procuring Entity*].*

l. We acknowledge that failure to sign each and every page of this Bid Form, including the Bill of Quantities, shall be a ground for the rejection of our bid.

Name: _____

Legal Capacity: _____

Signature: _____

Duly authorized to sign the Bid for and behalf of: _____

Date: _____

Bid Securing Declaration Form

[shall be submitted with the Bid if bidder opts to provide this form of bid security]

REPUBLIC OF THE PHILIPPINES)
CITY OF _____) S.S.

BID SECURING DECLARATION
Project Identification No.: *[Insert number]*

To: *[Insert name and address of the Procuring Entity]*

I/We, the undersigned, declare that:

1. I/We understand that, according to your conditions, bids must be supported by a Bid Security, which may be in the form of a Bid Securing Declaration.

2. I/We accept that: (a) I/we will be automatically disqualified from bidding for any procurement contract with any procuring entity for a period of two (2) years upon receipt of your Blacklisting Order; and, (b) I/we will pay the applicable fine provided under Section 6 of the Guidelines on the Use of Bid Securing Declaration, within fifteen (15) days from receipt of the written demand by the procuring entity for the commission of acts resulting to the enforcement of the bid securing declaration under Sections 23.1(b), 34.2, 40.1 and 69.1, except 69.1(f),of the IRR of RA No. 9184; without prejudice to other legal action the government may undertake.

3. I/We understand that this Bid Securing Declaration shall cease to be valid on the following circumstances:

    a. Upon expiration of the bid validity period, or any extension thereof pursuant to your request;
    b. I am/we are declared ineligible or post-disqualified upon receipt of your notice to such effect, and (i) I/we failed to timely file a request for reconsideration or (ii) I/we filed a waiver to avail of said right; and
    c. I am/we are declared the bidder with the Lowest Calculated Responsive Bid, and I/we have furnished the performance security and signed the Contract.

IN WITNESS WHEREOF, I/We have hereunto set my/our hand/s this ____ day of *[month] [year]* at *[place of execution]*.

[Insert NAME OF BIDDER OR ITS AUTHORIZED REPRESENTATIVE]
[Insert signatory's legal capacity]
Affiant

[Jurat]
[Format shall be based on the latest Rules on Notarial Practice]

Performance Securing Declaration (Revised)

[if used as an alternative performance security but it is not required to be submitted with the Bid, as it shall be submitted within ten (10) days after receiving the Notice of Award]

REPUBLIC OF THE PHILIPPINES)
CITY OF _____) S.S.

PERFORMANCE SECURING DECLARATION

Invitation to Bid: [Insert Reference Number indicated in the Bidding Documents]
To: [Insert name and address of the Procuring Entity]

I/We, the undersigned, declare that:

1. I/We understand that, according to your conditions, to guarantee the faithful performance by the supplier/distributor/manufacturer/contractor/consultant of its obligations under the Contract, I/we shall submit a Performance Securing Declaration within a maximum period of ten (10) calendar days from the receipt of the Notice of Award prior to the signing of the Contract.

2. I/We accept that: I/we will be automatically disqualified from bidding for any procurement contract with any procuring entity for a period of one (1) year for the first offense, or two (2) years **for the second offense**, upon receipt of your Blacklisting Order if I/We have violated my/our obligations under the Contract;

3. I/We understand that this Performance Securing Declaration shall cease to be valid upon:

    a. issuance by the Procuring Entity of the Certificate of Final Acceptance, subject to the following conditions:
        i. Procuring Entity has no claims filed against the contract awardee;
        ii. It has no claims for labor and materials filed against the contractor; and
        iii. Other terms of the contract; or

    b. replacement by the winning bidder of the submitted PSD with a performance security in any of the prescribed forms under Section 39.2 of the 2016 revised IRR of RA No. 9184 as required by the end-user.

IN WITNESS WHEREOF, I/We have hereunto set my/our hand/s this ____ day of [month] [year] at [place of execution].

[Insert NAME OF BIDDER OR ITS AUTHORIZED REPRESENTATIVE]
[Insert signatory's legal capacity]
Affiant

[Jurat]
[Format shall be based on the latest Rules on Notarial Practice]

Omnibus Sworn Statement (Revised)

[shall be submitted with the Bid]

REPUBLIC OF THE PHILIPPINES)
CITY/MUNICIPALITY OF _____) S.S.

AFFIDAVIT

I, [Name of Affiant], of legal age, [Civil Status], [Nationality], and residing at [Address of Affiant], after having been duly sworn in accordance with law, do hereby depose and state that:

1. *[Select one, delete the other:]*

   [If a sole proprietorship:] I am the sole proprietor or authorized representative of [Name of Bidder] with office address at [address of Bidder];

   [If a partnership, corporation, cooperative, or joint venture:] I am the duly authorized and designated representative of [Name of Bidder] with office address at [address of Bidder];

2. *[Select one, delete the other:]*

   [If a sole proprietorship:] As the owner and sole proprietor, or authorized representative of [Name of Bidder], I have full power and authority to do, execute and perform any and all acts necessary to participate, submit the bid, and to sign and execute the ensuing contract for [Name of the Project] of the [Name of the Procuring Entity], as shown in the attached duly notarized Special Power of Attorney;

   [If a partnership, corporation, cooperative, or joint venture:] I am granted full power and authority to do, execute and perform any and all acts necessary to participate, submit the bid, and to sign and execute the ensuing contract for [Name of the Project] of the [Name of the Procuring Entity], as shown in the attached [state title of attached document showing proof of authorization (e.g., duly notarized Secretary's Certificate, Board/Partnership Resolution, or Special Power of Attorney, whichever is applicable;)];

3. [Name of Bidder] is not "blacklisted" or barred from bidding by the Government of the Philippines or any of its agencies, offices, corporations, or Local Government Units, foreign government/foreign or international financing institution whose blacklisting rules have been recognized by the Government Procurement Policy Board, **by itself or by relation, membership, association, affiliation, or controlling interest with another blacklisted person or entity as defined and provided for in the Uniform Guidelines on Blacklisting;**

4. Each of the documents submitted in satisfaction of the bidding requirements is an authentic copy of the original, complete, and all statements and information provided therein are true and correct;

5. [Name of Bidder] is authorizing the Head of the Procuring Entity or its duly authorized representative(s) to verify all the documents submitted;

6. *[Select one, delete the rest:]*

   [If a sole proprietorship:] The owner or sole proprietor is not related to the Head of the Procuring Entity, members of the Bids and Awards Committee (BAC), the Technical Working Group, and the BAC Secretariat, the head of the Project Management Office or the end-user unit, and the project consultants by consanguinity or affinity up to the third civil degree;

   [If a partnership or cooperative:] None of the officers and members of *[Name of Bidder]* is related to the Head of the Procuring Entity, members of the Bids and Awards Committee (BAC), the Technical Working Group, and the BAC Secretariat, the head of the Project Management Office or the end-user unit, and the project consultants by consanguinity or affinity up to the third civil degree;

   [If a corporation or joint venture:] None of the officers, directors, and controlling stockholders of *[Name of Bidder]* is related to the Head of the Procuring Entity, members of the Bids and Awards Committee (BAC), the Technical Working Group, and the BAC Secretariat, the head of the Project Management Office or the end-user unit, and the project consultants by consanguinity or affinity up to the third civil degree;

7. *[Name of Bidder]* complies with existing labor laws and standards; and

8. *[Name of Bidder]* is aware of and has undertaken the responsibilities as a Bidder in compliance with the Philippine Bidding Documents, which includes:

   a. Carefully examining all of the Bidding Documents;
   b. Acknowledging all conditions, local or otherwise, affecting the implementation of the Contract;
   c. Making an estimate of the facilities available and needed for the contract to be bid, if any; and
   d. Inquiring or securing Supplemental/Bid Bulletin(s) issued for the *[Name of the Project]*.

9. *[Name of Bidder]* did not give or pay directly or indirectly, any commission, amount, fee, or any form of consideration, pecuniary or otherwise, to any person or official, personnel or representative of the government in relation to any procurement project or activity.

10. **In case advance payment was made or given, failure to perform or deliver any of the obligations and undertakings in the contract shall be sufficient grounds to constitute criminal liability for Swindling (Estafa) or the commission of fraud with unfaithfulness or abuse of confidence through misappropriating or converting any payment received by a person or entity under an obligation involving the duty to deliver certain goods or services, to the prejudice of the public and the government of the Philippines pursuant to Article 315 of Act No. 3815 s. 1930, as amended, or the Revised Penal Code.**

IN WITNESS WHEREOF, I have hereunto set my hand this __ day of ___, 20__ at _____, Philippines.

[Insert NAME OF BIDDER OR ITS AUTHORIZED REPRESENTATIVE]
[Insert signatory's legal capacity]
Affiant

[Jurat]

[Format shall be based on the latest Rules on Notarial Practice]

Contract Agreement Form for the Procurement of Infrastructure Projects (Revised)

[not required to be submitted with the Bid, but it shall be submitted within ten (10) days after receiving the Notice of Award]

CONTRACT AGREEMENT

THIS AGREEMENT, made this *[insert date]* day of *[insert month]*, *[insert year]* between *[name and address of PROCURING ENTITY]* (hereinafter called the "Entity") and *[name and address of Contractor]* (hereinafter called the "Contractor").

WHEREAS, the Entity is desirous that the Contractor execute *[name and identification number of contract]* (hereinafter called "the Works") and the Entity has accepted the Bid for *[contract price in words and figures in specified currency]* by the Contractor for the execution and completion of such Works and the remedying of any defects therein.

NOW THIS AGREEMENT WITNESSETH AS FOLLOWS:

1. In this Agreement, words and expressions shall have the same meanings as are respectively assigned to them in the Conditions of Contract hereinafter referred to.

2. The following documents as required by the 2016 revised Implementing Rules and Regulations of Republic Act No. 9184 shall be deemed to form and be read and construed as part of this Agreement, *viz*.:

   a. Philippine Bidding Documents (PBDs);
      i. Drawings/Plans;
      ii. Specifications;
      iii. Bill of Quantities;
      iv. General and Special Conditions of Contract;
      v. Supplemental or Bid Bulletins, if any;

   b. Winning bidder's bid, including the Eligibility requirements, Technical and Financial Proposals, and all other documents or statements submitted;

   Bid form, including all the documents/statements contained in the Bidder's bidding envelopes, as annexes, and all other documents submitted (*e.g.*, Bidder's response to request for clarifications on the bid), including corrections to the bid, if any, resulting from the Procuring Entity's bid evaluation;

   c. Performance Security;

   d. Notice of Award of Contract and the Bidder's conforme thereto; and

   e. Other contract documents that may be required by existing laws and/or the Procuring Entity concerned in the PBDs. **Winning bidder agrees that additional contract documents or information prescribed by the GPPB that are subsequently required for submission after the contract execution, such as the Notice to Proceed, Variation Orders, and Warranty Security, shall likewise form part of the Contract.**

3. In consideration for the sum of *[total contract price in words and figures]* or such other sums as may be ascertained, *[Named of the bidder]* agrees to *[state the object of the contract]* in accordance with his/her/its Bid.

4. The *[Name of the procuring entity]* agrees to pay the above-mentioned sum in accordance with the terms of the Bidding.

IN WITNESS whereof the parties thereto have caused this Agreement to be executed the day and year first before written.

[Insert Name and Signature]	*[Insert Name and Signature]*
[Insert Signatory's Legal Capacity]	*[Insert Signatory's Legal Capacity]*
for:	*for:*
[Insert Procuring Entity]	*[Insert Name of Supplier]*

Acknowledgment

[Format shall be based on the latest Rules on Notarial Practice]


Republic of the Philippines
gppb
Government Procurement Policy Board